LONG SEAMS	
COURSE	ORIENTATION
1	225°

SKIRT SEAMS	
COURSE	ORIENTATION
1	315°

*VERT – TOP TO BOTTOM

Ship loose items:
NONE

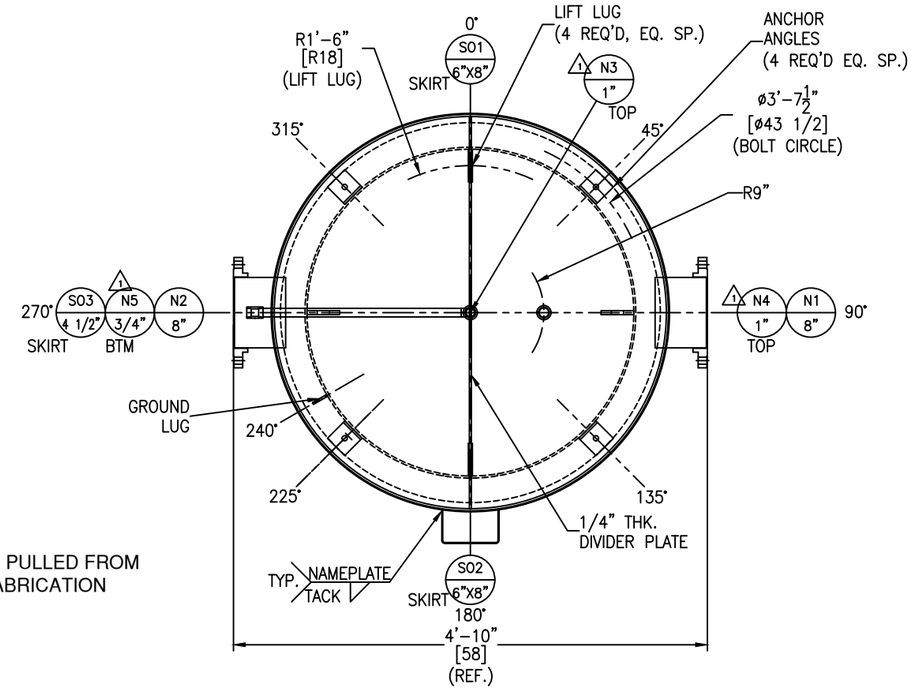

*NOTE: ALL ELEVATIONS ARE PULLED FROM WELD SEAM FOR EASE OF FABRICATION

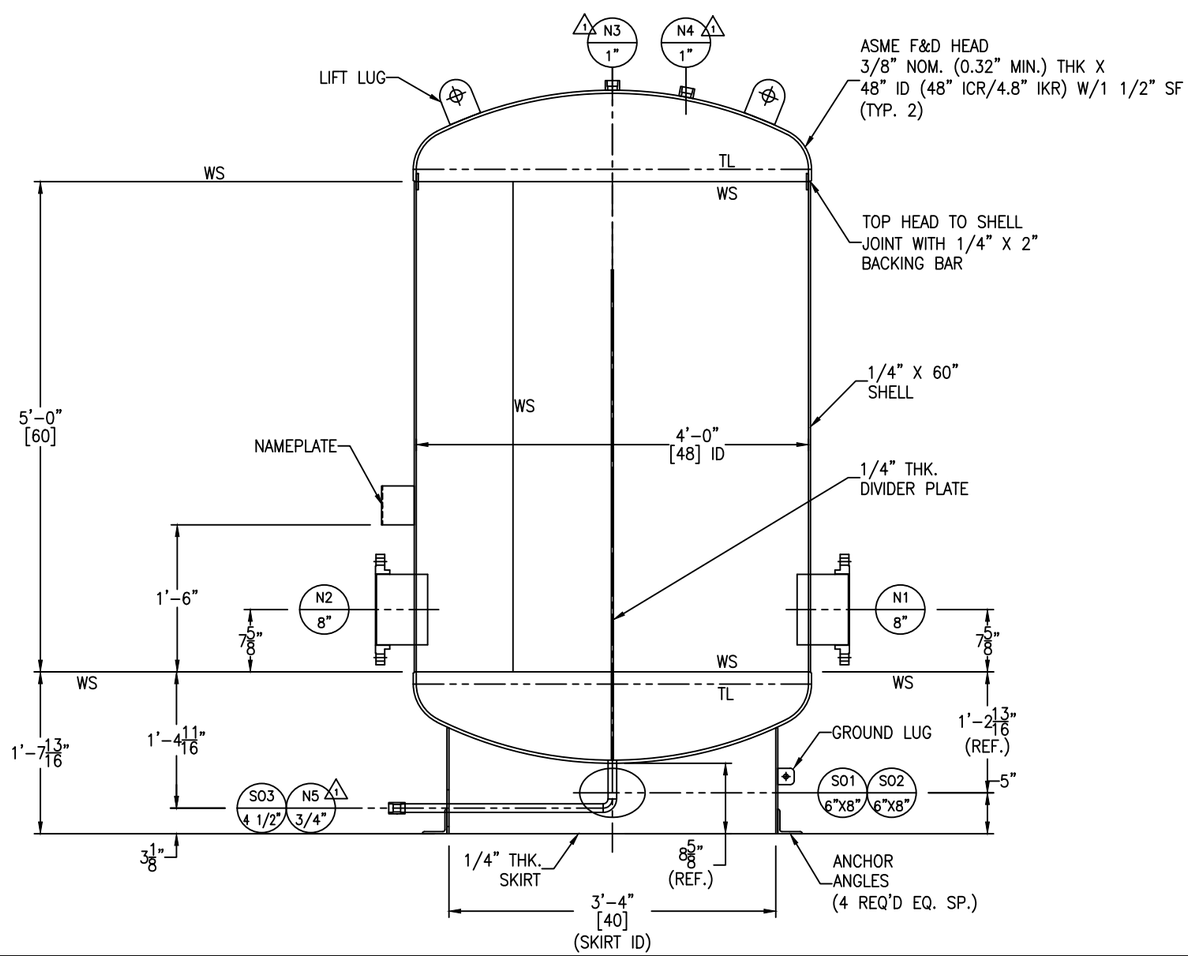

NOZZLE SCHEDULE

MARK	SERVICE	SIZE	RATING	TYPE / STYLE	NECK SCHED.	PROJECTION EXT. (℄)	PROJECTION INT. (MIN.)	WELD FIGURE	REPAD SIZE (WIDTH X THK.)	WELD SIZE "A1"	"A2"	"B1"	"B2"	"C1"	"C2"
N1	–	8"	150#	RFSO	40S	4 3/4"	1"	1,7	–	1/4	1/2	1/4	–	–	–
N2	–	8"	150#	RFSO	40S	4 3/4"	1"	1,7	–	1/4	1/2	1/4	–	–	–
N3	VENT	1"	3000#	HALF THRD CPLG	–	–	–	12	–	–	–	5/16	–	–	–
N4	PRV	1"	3000#	HALF THRD CPLG	–	–	–	12	–	–	–	5/16	–	–	–
N5	1 DRAIN	3/4"	3000#	FULL THRD CPLG W/ PIPE & ELBOW	–	–	–	4	–	–	–	5/16	–	–	–
SO1	SKIRT OPENING	8"X6"	–	–	–	–	–	–	–	–	–	–	–	–	–
SO2	SKIRT OPENING	8"X6"	–	–	–	–	–	–	–	–	–	–	–	–	–
SO3	SKIRT OPENING	4 1/2"	–	–	–	–	–	–	–	–	–	–	–	–	–

ASME SECT. VIII, DIV. 1
2023 EDITION

ENG. _____ DATE: _____

Q.C. _____ DATE: _____

A.I. _____ DATE: _____

This drawing is issued for customer approval. please review, make approval changes (if any) in red. check the appropriate box, sign & date.

- ☐ Approval – no changes. Please proceed with fabrication.
- ☐ Approved as noted. Please proceed with fabrication
- ☐ Not approved. Please make changes and resubmit.

Customer signature _____ Date _____

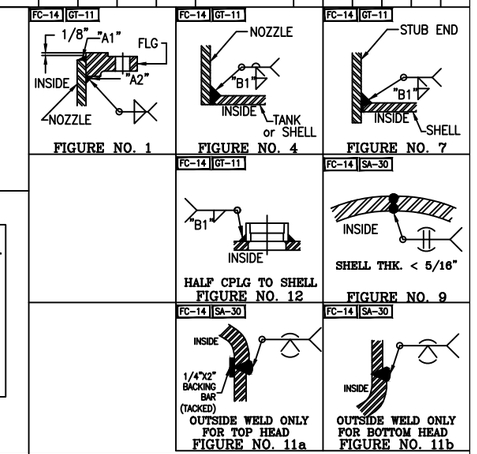

MATERIALS OF CONSTRUCTION

	VESSEL
SHELL	SA240-304/304L
HEADS	SA240-304/304L
COUPLINGS	SA182F-304/304L
NOZZLE NECKS	SA312-304/304L WLD & SA403-304/304L WPW
NOZZLE FLANGES	SA182F-304/304L
MANWAY NECKS	–
MANWAY FLANGES	–
GASKETS	–
BOLTS/STUDS	–
NUTS	–
REPADS	–
RIM ANGLE	–
SUPPORTS/HOLD DOWNS	SA240-304/304L & SA479-304/304L
LIFTING LUGS	SA240-304/304L
VACUUM RINGS	–
INSULATION RINGS	–
GROUND LUG	SA240-304/304L
BAFFLE	SA240-304/304L

DESIGN DATA

	VESSEL
DESIGN AND FAB. CODE	ASME
CERT. STAMP REQ'D.	YES
DESIGN PRESSURE	125 PSIG
DESIGN TEMPERATURE	125° F
MIN. DESIGN METAL TEMP.	-20° F @ 125 PSIG
OPERATING PRESSURE	–
OPERATING TEMPERATURE	–
JOINT EFFICIENCY HEADS	0.85
JOINT EFFICIENCY SHELL	0.70
CORROSION ALLOWANCE	0"
SPECIFIC GRAVITY	1.0
EARTHQUAKE ZONE	Ss = (0.31) S1 = (0.09)
WIND LOAD	105 MPH
STRESS RELIEF	NOT REQ'D
RADIOGRAPHIC EXAM	NOT REQ'D
DYE PENETRANT EXAM	NOT REQ'D
MAGNETIC PARTICLE EXAM	NOT REQ'D
HYDROSTATIC TEST	163 PSIG / GAUGE #9

GENERAL NOTES

1.) COVER ALL FLANGES, OPENINGS & MACHINED SURFACES PRIOR TO SHIPMENT UNLESS OTHERWISE NOTED.

2.) ASME CODE VESSELS TO BE IN ACCORDANCE WITH UG-80 & UG-81. TOLERANCES: +/- 1/8" FOR DIMENSIONS AND +/- 2 DEGREES FOR ORIENTATIONS.

3.) ASME MATERIALS TO CONFORM TO THE FOLLOWING: FLANGES – B16.5, FITTINGS – B16.9 & COUPLINGS – B16.11.

4.) PICKLE ALL EXTERIOR WELDS. CLEAN & PASSIVATE EXTERIOR OF VESSEL. CLEAN INTERIOR.

VESSEL FINISH

INTERIOR WELD TREATMENT:	SAV TANK STANDARD
EXTERIOR WELD TREATMENT:	SAV TANK STANDARD
SAV TANK FINISHING STANDARD:	SEE NOTE 4
INSULATION:	N/A
PAINTING:	N/A

VESSEL CAPACITY AND WEIGHTS

OPERATING CAPACITY	500 GAL.
FULL CAPACITY	580 GAL.
EMPTY SHIPPING WEIGHT	1,650 LBS.
WEIGHT FULL OF WATER	6,550 LBS.
WEIGHT FULL OF PRODUCT	6,550 LBS.

REV	D.BY	C.BY	DATE	DESCRIPTION
2				AS BUILT
1	RS	NP	12/2/25	CERTIFIED
0	RS	NP	11/20/25	APPROVAL

1 REVISIONS

Savannah Tank & Equipment Corp.
1517 Telfair Road, Savannah, GA 31415
(912) 233-8902

DRAWN BY: RS
CHK'D BY: NP
APPROVED BY: NP
SCALE: 1" = 1'-0"

VERTIV CORPORATION
BUFFER TANK
EQUIP. #
CUST. PO # TBD

DRAWING NO.: 119-25-1 SHT 1 OF 2 REV. SET 1

FC-14

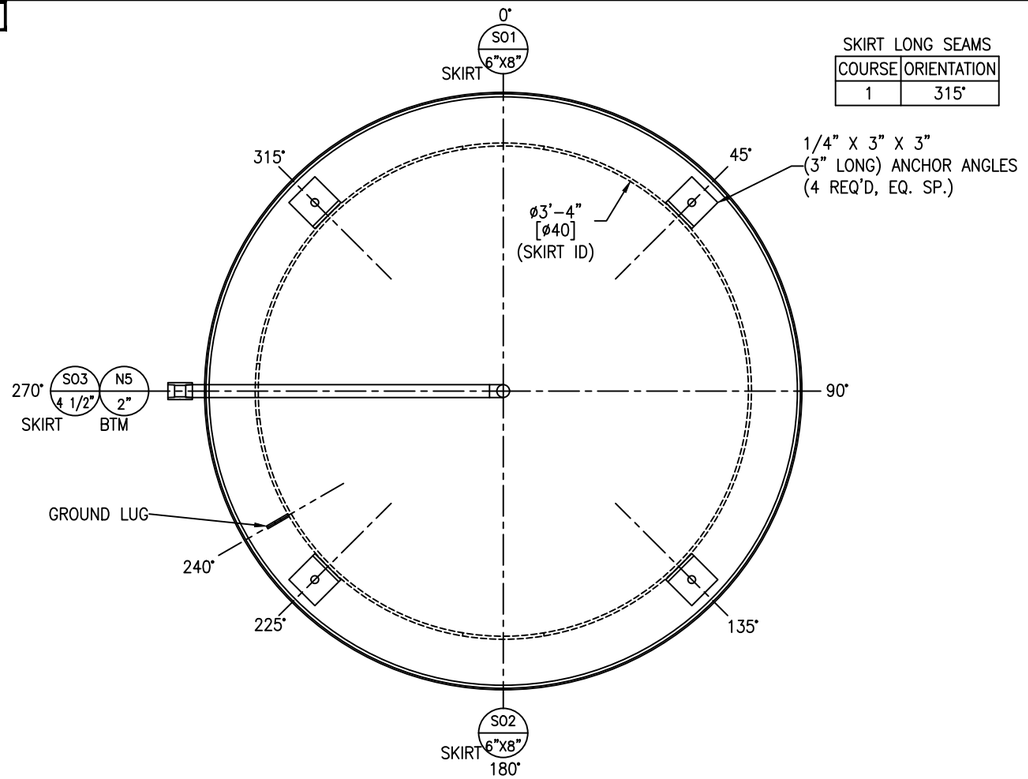

SKIRT LONG SEAMS

COURSE	ORIENTATION
1	315°

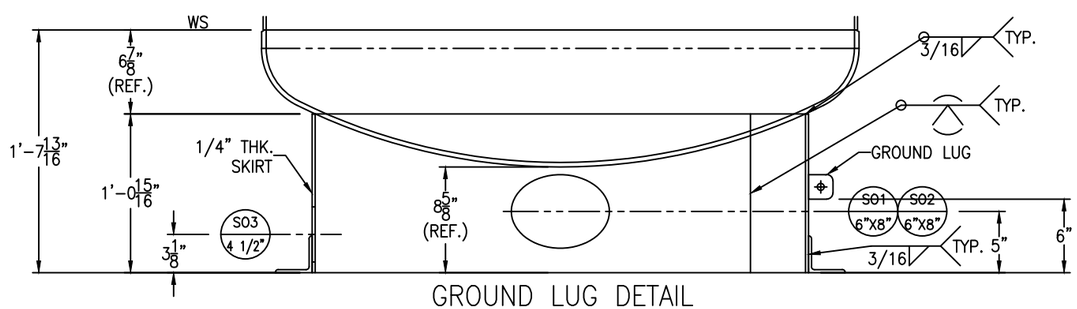

GROUND LUG DETAIL

SCALE: 1 1/2" = 1'-0"

FC-14

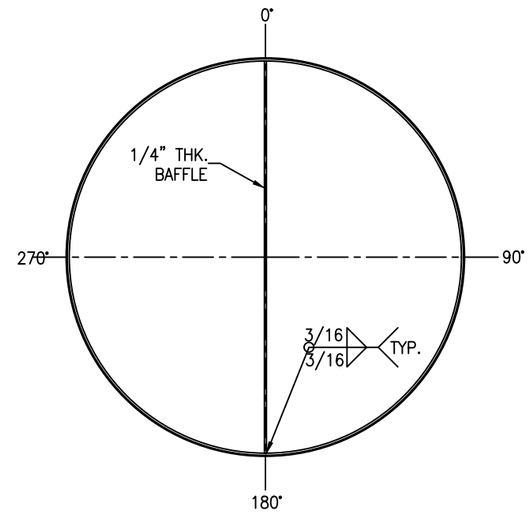

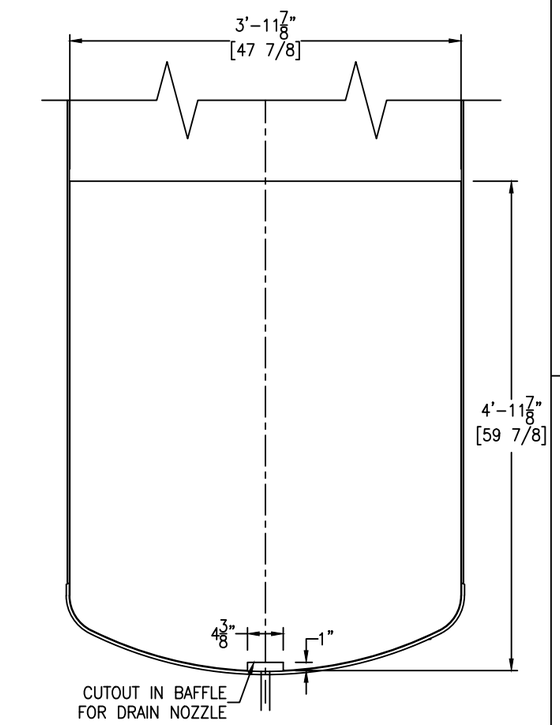

BAFFLE DETAIL

SCALE: 1" = 1'-0"

FC-14

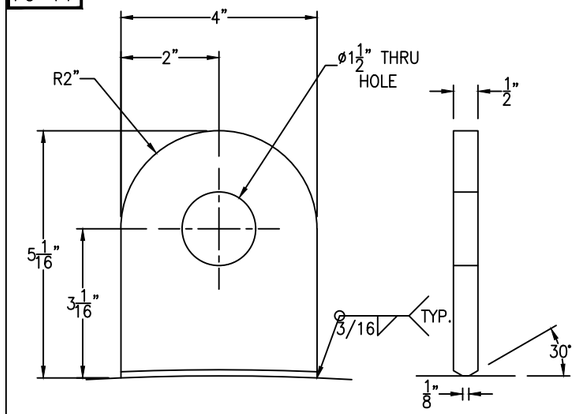

TANK WT. <= 5000#
SHACKLE PIN DIA. = 3/4"

LIFT LUG DETAIL

(4 REQ'D) SCALE: 6" = 1'-0"

FC-14

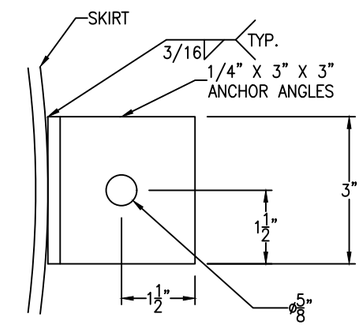

ANCHOR ANGLE DETAIL

(4 REQ'D) SCALE: 6" = 1'-0"

FC-14

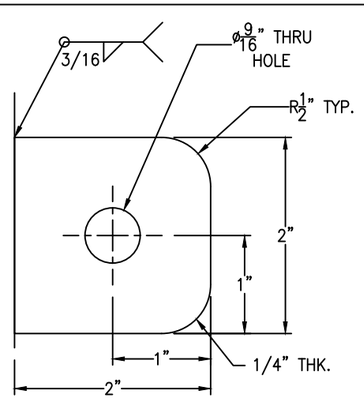

GROUND LUG IS LOCATED @ 240°

GROUND LUG DETAIL

(1 REQ'D) SCALE: 1'-0" = 1'-0"

FC-14

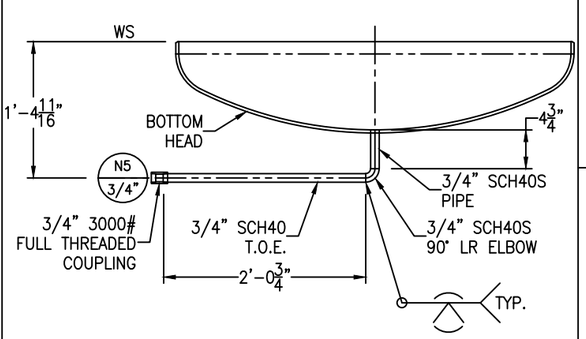

1 NOZZLE N5 DETAIL

SCALE: 1" = 1'-0"

REV	D.BY	C.BY	DATE	DESCRIPTION
2				AS BUILT
1	RS	NP	12/2/25	CERTIFIED
0	RS	NP	11/20/25	APPROVAL

1 REVISIONS

Savannah Tank & Equipment Corp.
1517 Telfair Road, Savannah, GA 31415
(912) 233-8902

DRAWN BY: RS
CHK'D BY: NP
APPROVED BY: NP
SCALE: 1" = 1'-0"

VERTIV CORPORATION
BUFFER TANK
EQUIP. #
CUST. PO # TBD

DRAWING NO.: 119-25-2 SHT 2 OF 2 REV. SET 1